Dual-Spectrum Target Recognition and Tracking Electro-Optical System

NVT-9600– (XXX Series)Technical Specification Sheet

product name

Dual-spectrum target recognition and tracking electro-optical system

Product Illustration



specifications and models

NVT–9612

Product Applications

Airport security, border perimeter protection, low-altitude short-range defense, and low-speed/small-sized target tracking, etc.

Product Features

- White-light heating image fusion, high sensitivity, ultra-long-range imaging, supports optical fog clearance, and provides 24-hour uninterrupted defense.
- AI edge computing integrates full-field-of-view specific target detection, recognition, tracking, and automatic focusing into a unified solution.
- High-efficiency detection and low-latency tracking enable tracking of high-speed moving targets with velocities of 1–50 m/s and strong maneuverability.
- Supports multiple classification tasks, similarity assessment, target statistics, close-up photography, and snapshot capture.
- Supports multi-channel imaging and multi-stream encoding, as well as multi-protocol transmission and multi-user connectivity.
- Customized servo system with a maximum 90–90° pitch range, featuring a high-speed, high-precision direct-drive servo control system.
- Supports payload equipment, enabling precise reporting of target locations in geographic coordinates (latitude, longitude, and elevation).
- Supports advanced application systems such as latitude/longitude coordinate conversion and third-party data forwarding, enabling seamless integration with third-party systems.
- Supports integration with: third-party radars, radio detection systems, friend-or-foe identification systems, and physical or protocol-based alarm signals
- Industrial applications for typical targets such as aerial targets 1–6 km, low-altitude targets, slow-moving targets, and small-sized targets
- Air-to-air 1–40 km detection of large aircraft targets

Technical Parameter

<table>
<tr><td rowspan="3">Product</td><td>Name</td><td colspan="6">Dual-spectrum target recognition and tracking electro-optical system</td></tr>
<tr><td>Test Model</td><td colspan="6">NVT-9600-XXX</td></tr>
<tr><td>Specifications and models</td><td colspan="6">NVT-9612</td></tr>
<tr><td rowspan="6">Visible Light Image</td><td>Image resolution, frame rate</td><td colspan="6">1920×1080 @ 25fps/30fps – configurable</td></tr>
<tr><td>Lens focal length</td><td colspan="6">F12.3–800 mm (Lens aperture: Ø110 mm), 65× continuous zoom lens</td></tr>
<tr><td>Image display</td><td colspan="6">Available in color, black and white, and fogged (electronic fogging or optical fogging optional).</td></tr>
<tr><td>Major function</td><td colspan="6">Image stabilization, wide dynamic range, strong light suppression, image rotation, anti-flutter</td></tr>
<tr><td rowspan="4">Daytime Work Performance Indicators</td><td colspan="6">Reference targets: UAV – 0.3 m × 0.3 m; Civil aviation passenger aircraft – approx. 40 m × 36 m
(Performance requirements: visibility ≥ 20 km, ambient temperature ≤ 20 °C, relative humidity <40%)</td></tr>
<tr><td colspan="2">Detection range (Unit: km)</td><td colspan="2">Tracking distance (unit: km)</td><td colspan="2">Identification Distance (Unit: km)</td></tr>
<tr><td>Unmanned aerial vehicle</td><td>Civil aviation aircraft</td><td>Unmanned aerial vehicle</td><td>Civil aviation aircraft</td><td>Unmanned aerial vehicle</td><td>Civil aviation aircraft</td></tr>
<tr><td>⩾6</td><td>⩾25</td><td>⩾5.5</td><td>⩾20</td><td>⩾5</td><td>⩾15</td></tr>
<tr><td rowspan="6">Infrared Thermal Imaging</td><td>Detector Type</td><td colspan="6">Cadmium telluride mercury-based refrigeration type</td></tr>
<tr><td>Image resolution ratio</td><td colspan="6">Physical resolution: 640×512; Image encoding resolution: 1280×1024</td></tr>
<tr><td>Lens focal length</td><td colspan="6">F22.5–500 mm (Lens aperture: Ø120 mm), 22x continuous zoom lens</td></tr>
<tr><td>Image display</td><td colspan="6">Hot Black, Hot White</td></tr>
<tr><td rowspan="4">Nighttime Work Performance Indicators</td><td colspan="6">Reference targets: UAV – 0.35 m × 0.35 m; Civil aviation passenger aircraft – approx. 40 m × 36 m
(Performance requirements: Ambient temperature: ≤20 °C or background temperature difference ≥10 °C; relative humidity: <40 %)</td></tr>
<tr><td colspan="2">Detection range (Unit: km)</td><td colspan="2">Tracking distance (unit: km)</td><td colspan="2">Identification Distance (Unit: km)</td></tr>
<tr><td>Unmanned aerial vehicle</td><td>Civil aviation aircraft</td><td>Unmanned aerial vehicle</td><td>Civil aviation aircraft</td><td>Unmanned aerial vehicle</td><td>Civil aviation aircraft</td></tr>
<tr><td>⩾4.5</td><td>⩾40</td><td>⩾4</td><td>⩾20</td><td>⩾3.5</td><td>⩾12</td></tr>
<tr><td rowspan="5">Cloud Platform Parameter</td><td>Horizontal rotation stroke, speed range</td><td colspan="6">0°–360° continuous infinite-rotational range
Horizontal phase modulation speed: 0.01°–80°/s; preset position speed: 120°/s</td></tr>
<tr><td>Vertical rotation stroke, speed range</td><td colspan="6">-90° ~90°
Vertical key control speed: 0.01°–60°/s; preset position speed: 80°/s</td></tr>
<tr><td>Electronic Calibration</td><td colspan="6">Angle deflection compensation (optional: gyroscope, inertial navigation system)</td></tr>
<tr><td>Pre-set stop accuracy</td><td colspan="6">±0.01°</td></tr>
<tr><td>Gimbal Functions</td><td colspan="6">Azimuth display, zero position setting, 3D control, guard position, speed adjustment</td></tr>
<tr><td rowspan="2">Intelligence</td><td>Intelligent Computing Power</td><td colspan="6">Domestically produced NPU / 10T (Optional: scalable to 28T)</td></tr>
<tr><td>Intelligent Detection</td><td colspan="6">Specific object detection and region detection; number of detected objects ≥ 32</td></tr>
</table>

Application	Intelligent Early Warning	Object detection can integrate with alarm output, capture images of detected objects, and overlay alarm characters on these images.
	Target recognition	Supports classification and recognition of over 80 types of targets, including drones, humans, vehicles, and vessels.
	Identification Output	Displays target type, similarity score, and identification number; overlays these information elements on the image display; supports protocol-based upload and triggers an alarm联动.
	Target Lock	The system supports target guidance-locking, program command locking, target detection and identification locking, as well as manual locking.
	Guided Lock Type	Supports: Receivable radar, spectrum, TDOA, 5G-A, R-ID, ADS-B, and AIS guidance
	Target following	Long-term tracking, time-limited tracking, and 1–5s occlusion tracking
	Automatic Zoom Close-up	Automatic zoom during tracking; supports Picture-in-Picture mode and 2x,4x, and 8x digital magnification display.
	Privacy Blocking	Supports setting specific targets within the field of view, with the occlusion area updating in sync with the field of view.
	Detection Steering Function	The image overlay-based photoelectric detection system's capability to indicate geographic orientation and coverage area.
Images and System	Networking protocol	IPv4、TCP/IP、UDP、HTTP、RTP/RTCP、FTP、NTP
	Video Transmission Protocol	ONVIF、GB/T 28181、RTSP、RTMP
	Video Compression Standards	H.265 /H.264/MJPEG (Limited to screenshots)
	IP Output	Visible light and thermal imaging image fusion outputs a single IP address; it also supports dual IP outputs.
	Management function	Provides recording and querying capabilities for operational logs, alarm logs, and anomaly logs.
General Regulations	Device interface	RJ45 connector (19-pin GJB certified RJ45 connector, equipped with a power supply and a 100M adaptive network interface) is customizable for: alarm, audio, and SD card storage.
	Levels of protection	IP66 (weatherproofing optional; spray colors can be customized)
	Operating temperature/humidity	-40°C to +60°C, humidity <90%
	Power Supply & Power Consumption	Standard equipment: DC 48V/12.5A power supply; maximum power consumption ≤ 240W (steady-state).
	Size dimension	672 mm (L) × 445 mm (W) × 780 mm (H) (For reference only)
	Weight (Net Weight)	≤85 kg (Standard configuration is for reference only; custom equipment exceptions apply)

Hardware and Software

Random accessories: power supply unit (including lightning protection), power cables, data cables, installation accessories, warranty card, instruction manual, etc.

Optional accessories: tripod, clamp mounting bracket.

Software offerings: Free provision of SDKs and EOCT display control software; paid provision of the LADMS Low-altitude Airspace Management Platform or industry-specific customized software.

Product Size

1、 Equipment Dimensions (units: Mm):

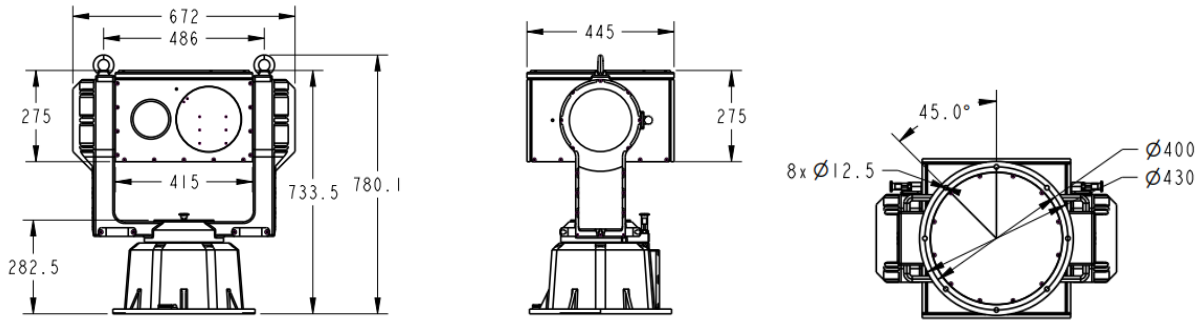

special software

Freely provided: SDK development kit, integration package for the指控协议 and display control software EOSMS, as well as configuration tool EOCT.

Paid services: LADMS Low-altitude Flight Control Platform or customized industry-specific application software

Scene Display







Last updated: 2026-08-11. Any changes to the appearance or specifications of standard products will not be communicated separately; please refer to the actual product for confirmation.